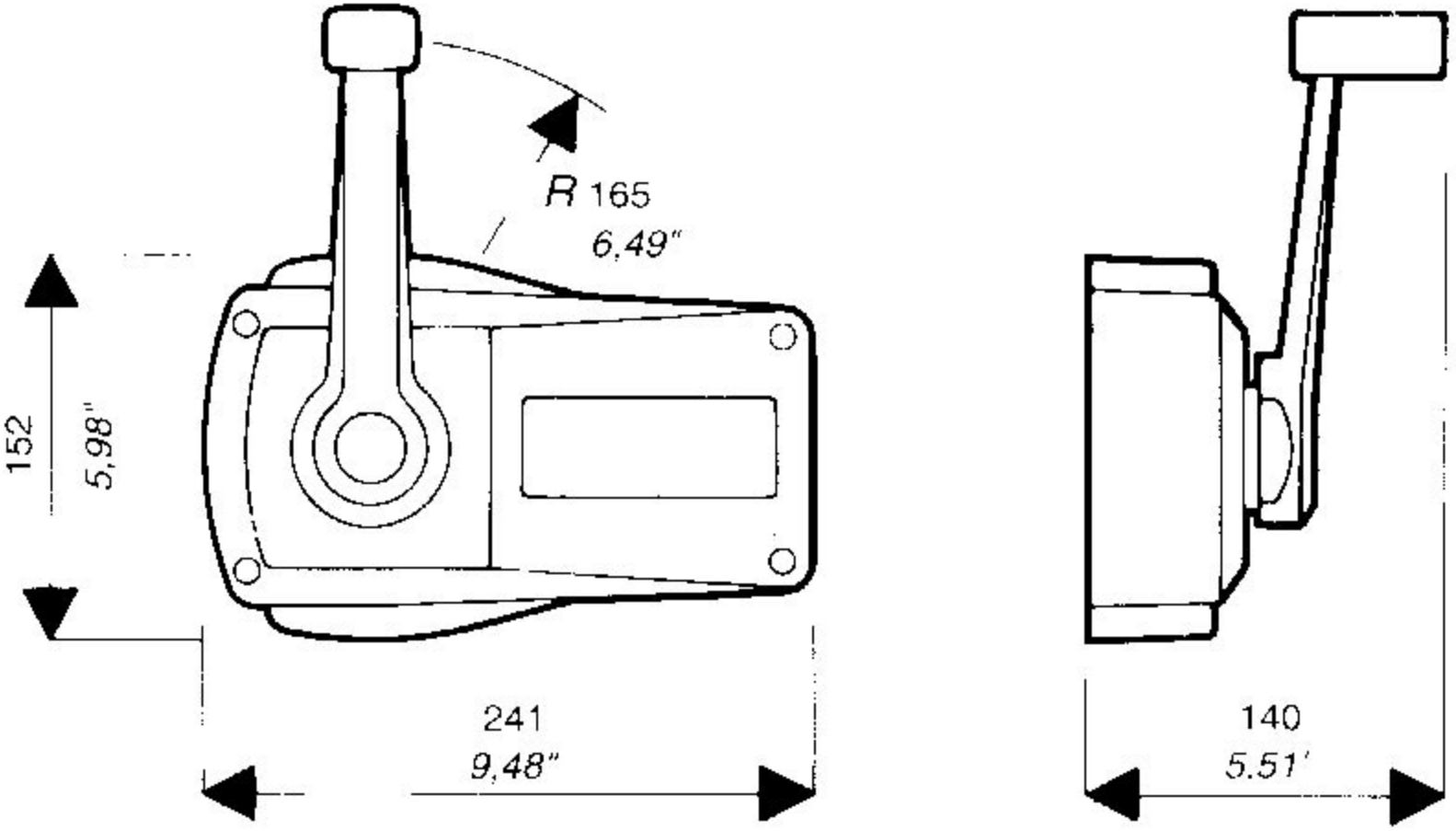
R 165
6,49"
152
5,98"
241
9,48"
140
5.51'